Written by Sujan Shrestha, PhD
sujan@admiralinstruments.com

Can Squidstat Potentiostats Be Configured as Bipotentiostats for RRDE?

Yes, they can! Here we explain how to use two Squidstat channels as a bipotentiostat for Rotating Ring Disk Electrode experiments

In bipotentiostat mode, two working electrodes (WEs) are set with respect to a common reference and a common counter electrode. Although both WEs are running simultaneously, a user might choose to run the same experiment or different experiments on each WE. Also, a user might want to set the second WE at a constant potential difference with respect to the first WE instead of a reference electrode. This is known as "scanning bipotentiostat mode."

Both modes can be easily configured using any two of the four channels built into a Squidstat Prime, or by combining any two single-channel Squidstats like the Squidstat Plus or Squidstat Solo. Any Squidstat Plus or Solo channel could also be combined with one Squidstat Prime channel to operate as a bipotentiostat. All Squidstat hardware can operate interchangeably for multichannel experiments.

Before running any experiment with a Squidstat Plus that involves connecting two or more channels to a single experiment, please remember to switch the potentiostats to Floating mode using the switch on the back of each instrument. The Squidstat Solo and Squidstat Prime does not have such a switch. For more background and guidance about this, please review our application note titled *Are Squidstats Capable of Both Grounded and Floating Measurements?*

Also, for scanning bipotentiostat mode, one should connect the reference electrode clip (RC) of the second channel to the first working electrode instead of the reference electrode. And they should set a constant voltage bias. See Figures 1 and 2 below for directions about how to connect the cable leads.

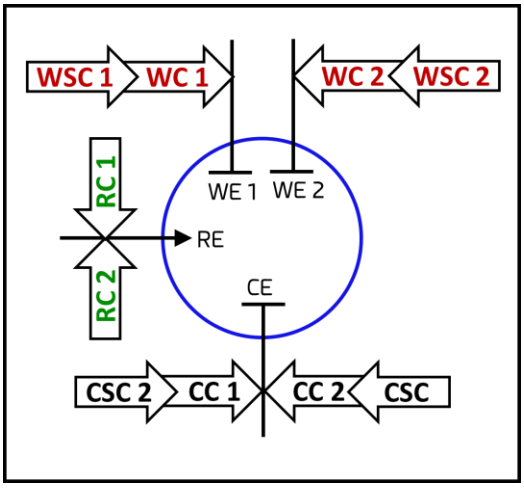

Figure 1. *Bipotentiostat connection -> WC: working electrode clip, WSC: working sense electrode clip, RC: reference electrode clip, CC: counter electrode clip, CSE: counter sense electrode clip*

www.admiralinstruments.com
contact@admiralinstruments.com
Main Office: +1 480 256 8706

Written by Sujan Shrestha, PhD
sujan@admiralinstruments.com

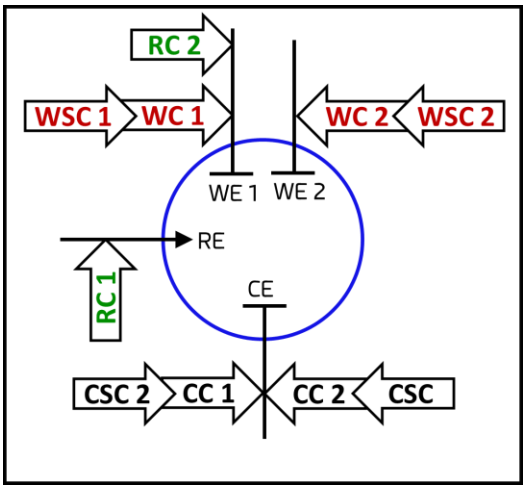

Figure 2. *Scanning bipotentiostat connection. WC: working electrode clip, WSC: working sense electrode clip, RC: reference electrode clip, CC: counter electrode clip, CSE: counter sense electrode clip. Please note that the RC 2 is connected to the working electrode 1.*

Among the most common applications of bipotentiostat mode is a Rotating Ring Disk Electrode (RRDE) experiment. In RRDE, two electrodes exist: a disk and a ring. In the above connection schemes, the disk electrode is working electrode 1 (WE 1) and the ring electrode is working electrode 2 (WE 2). The ring electrode is set at a fixed voltage bias with respect to the reference electrode in bipotentiostat mode or to WE 1 in scanning bipotentiostat mode. The disk is usually subjected to a steady state potential scan. Currents measured at the disk and the ring are plotted against the potential of the disk electrode.

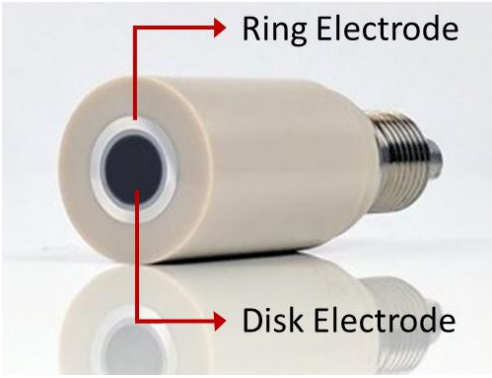

Figure 3. *A ring disk electrode from Pine Research Instrumentation, Inc. The disk electrode is made of a glassy carbon and the ring is made of platinum.*

Bipotentiostat mode is regularly used in oxygen reduction reaction (ORR) catalyst research to measure the production of the hydrogen peroxide (H_2O_2) which is the byproduct of the reaction at the disk.

At the disk electrode

$$O_2 + 2H^+ + 2e^- \rightarrow H_2O_2$$

$$H_2O_2 + 2\,H^+ + 2e^- \rightarrow 2H_2O$$

At the ring electrode

$$H_2O_2 \rightarrow O_2 + 2H^+ + 2e^-$$

www.admiralinstruments.com
contact@admiralinstruments.com
Main Office: +1 480 256 8706

Written by Sujan Shrestha, PhD
sujan@admiralinstruments.com

Hence, during the RRDE experiment, H_2O_2 produced at the disk electrode is carried by convection towards the ring electrode because of the rotation. By oxidizing the H_2O_2 at a constant potential and measuring the current, the amount produced can be quantified. A good catalyst for the ORR will produce very little H_2O_2 compared to the amount of O_2 reduced, because it is a waste of electrons for the O_2 to be reduced to H_2O_2. In addition, H_2O_2 is a good oxidizing agent and harmful to the materials in a fuel cell utilizing the oxygen reduction reaction.

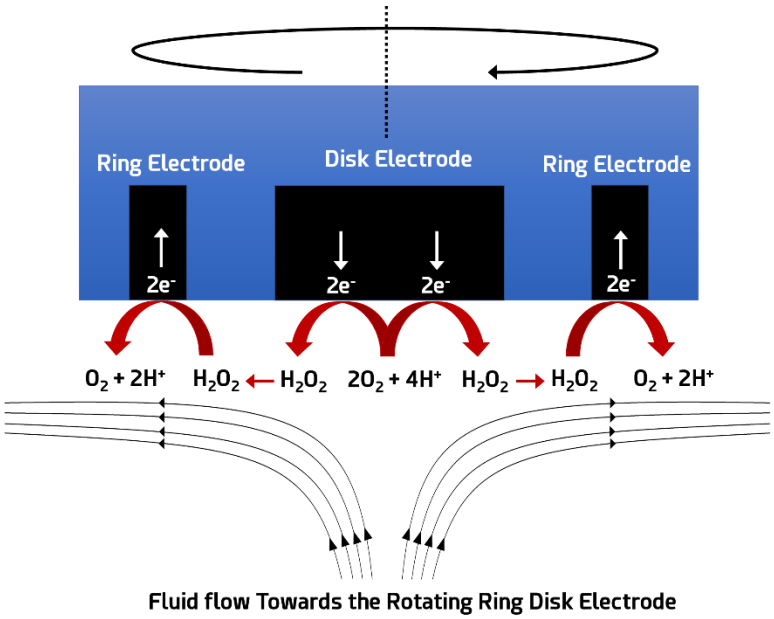

Figure 4. *Formation of hydrogen peroxide at the disk electrode during oxygen reduction. The peroxide is carried to the ring electrode due to the rotation where it is oxidized back to the oxygen.*

Running a RRDE experiment on the Squidstat User Interface

A RRDE experiment is very simple to run with our Squidstat potentiostats by using the pre-built RRDE experiment in the Run an Experiment tab. To begin, refer to Figures 1 and 2 above to correctly attach the cell cable leads from 2 channels onto your RRDE sample. For convenience, the Squidstats are designed for any Squidstat channels can be attached to either the disk or ring electrode. In other potentiostats, only the channels designated for the ring electrode can be used.

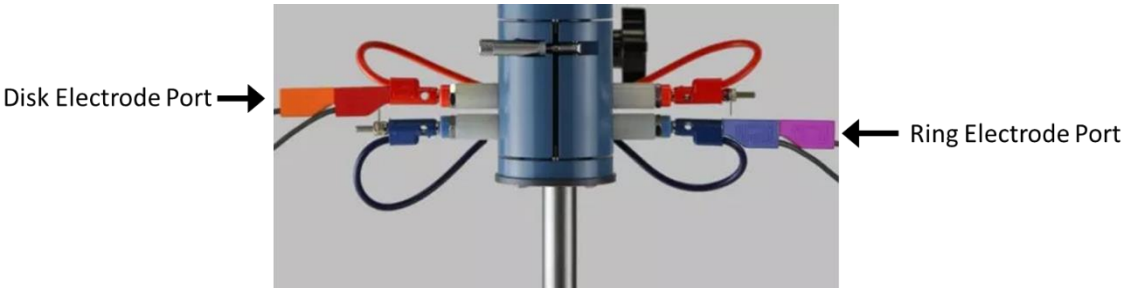

***Figure 5**. Working Electrode Connections to set up RRDE experiment using rotors manufactured by Pine Research Instrumentation, Inc.*

www.admiralinstruments.com
contact@admiralinstruments.com
Main Office: +1 480 256 8706

After identifying which channel from which Squidstat is connected to the disk and the ring electrode, respectively, open the SUI. Once opened, navigate to the Run an Experiment tab and then scroll down the list of experiments on the left to find RRDE. Select RRDE and then use the dropdown menus to assign the corresponding Squidstat channels connected to the disk and ring.

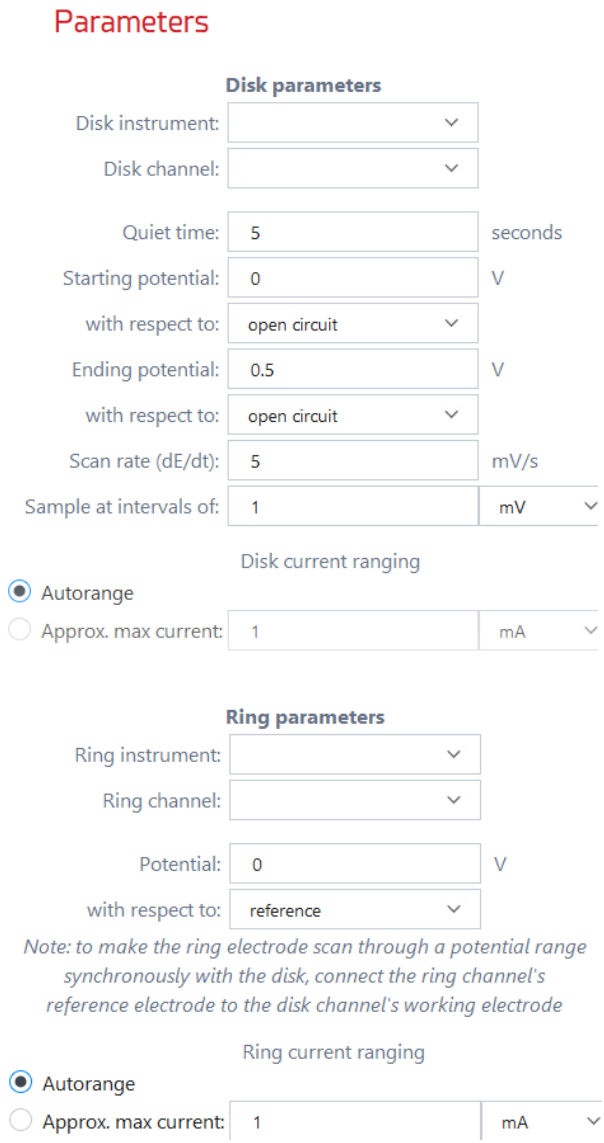

***Figure 6**. Parameter options within the SUI to run a RRDE experiment*

Lastly, the user inputs each parameter to run a RRDE experiment (either in bipotentiostat or scanning bipotentiostat mode). There are numerous options available, each of which are defined below:

Disk instrument: Used to select which Squidstat is being used to control the disk. The selected Squidstat can be either a single-channel or multichannel Squidstat. If a multichannel Squidstat (like the 4-channel Squidstat Prime) is selected, the specific channel controlling the disk will need to be assigned.

Disk channel: Used to select which channel on the selected Squidstat will control the disk. In cases where a single-channel Squidstat is assigned to control, this will default to Channel 1.

Quiet time: The starting potential will be applied for the length of time input here before the scanning portion of the RRDE experiment begins.

Starting potential: The potential that is applied at the start of the scan. This can be set with respect to the open circuit potential or the reference potential. Reference potential is the potential of the electrode that the reference electrode clip (RC) is attached to.

Ending potential: The potential that is applied at the end of the scan. This can be set with respect to the open circuit potential or the reference potential. Reference potential is the potential of the electrode that the reference electrode clip (RC) is attached to.

Scan rate: The rate of change of potential with respect to time.

Sample at intervals of: The interval between two consecutive current data points. It can be set based on an interval of time (s) or potential (mV).

Disk current ranging: There are two options available…

1. **Autorange:** This is the default setting. The SUI will automatically choose the best current range for the highest accuracy possible based on the level of current being measured. Consequently, the current range being used may change one or more times during the experiment. For more background about this, please review our application note titled *Why Do Potentiostats Click.*

2. **Approx. max current:** This is a fixed current range mode. Using it requires entering the highest magnitude of current expected during the experiment. The SUI will then select the best current range based on this value, and then the current range will not change during the experiment.

Ring instrument: Used to select which Squidstat is being used to control the ring. The selected Squidstat can be either a single-channel or multichannel Squidstat. If a multichannel Squidstat (like the 4-channel Squidstat Prime) is selected, the specific channel controlling the ring will need to be assigned.

Ring channel: Used to select which channel on the selected Squidstat will control the ring. In cases where a single-channel Squidstat is assigned to control, this will default to Channel 1.

Potential: This is the constant potential that is applied at the ring electrode. Set this potential with respect to the reference. For bipotentiostat mode, make sure the reference electrode clip (RC) of the channel connected to the ring electrode is also attached to the same reference electrode that the RC of the disk electrode is connected to. For scanning bipotentiostat mode, attach the RC of the channel connected to the ring electrode to the disk electrode. The potential of the ring should be set against the reference for this mode to work.

Ring current ranging: Same concept as disk current ranging, explained above on this page.